內部構造介紹—WF42HR – WF180HR

- 太陽齒/行星齒
  1. 高強度合金鋼,表面高硬度,耐磨耗,高韌性
  2. 螺旋齒型設計,高傳動能力,低噪音 · 低震動
- Sun/Planetary Gear
  1. High strength alloy steel , high hardness of surface , anti-abrasion and high impact .
  2. Gear is Helical gear design, high efficiency , lower noise and lower vibration .

- 可調式螺旋傘齒輪背隙結構
- Adjustable Helical Bevel Gear Backlash structure.

- 輸入法蘭
  1. AL-6061-T6 , 表面鋁陽極霧黑,高質感, 高防蝕能力
  2. 輸入法蘭一體式設計,使得伺服馬達軸心與太陽齒有極佳的同心度
  3. 可與各品牌的伺服馬達與步進馬達搭配組合
- Input Flange
  1. Material is AL-6061-T6 , Surface is Eloxal to improve the antioxidant capacity and high quality.
  2. Input flange is One-Piece design for sun gear and servomotor shaft get excellent concentricity.
  3. Use to any brand servomotor or step motor.

- 輸入法蘭與內齒環
  輸入法蘭與內齒環使用高精密軸承為組裝時的引導,能使輸入到輸出端有最佳的同心度,降低震動
- Input Flange and Inner Gear Box
  The input flange using high precision bearing to lead assembly, Let the input to output shaft center has excellent concentricity for reduce vibration.

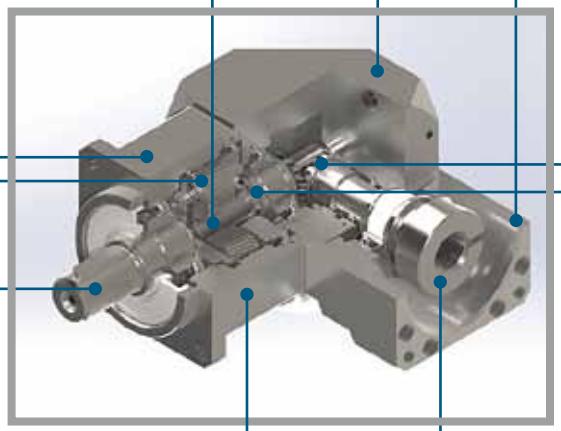

- 螺旋傘齒輪組
  1. Ni-Cr-Mo 合金鋼材質
  2. 滲碳製程
  3. 軸部強韌,表面耐磨耗
- Helical Bevel Gear component
  1. Ni-Cr-Mo alloy steel
  2. Carburizing Process
  3. Stiffness and anti-abrasion.

- 行星齒內孔使用滿針滾針軸,耐磨,高精度
- Use full arrange needle pin for anti-abrasion and higher precision.

- 無鍵式轉軸,保有最優的動平衡,降低振動.
- Non-Keyway assembly, have excellent dynamic balance and reduce vibration.

- 출력축
  일체형 설계로 유성기어 운행 정도 확보, 앞뒤 베어링의 간격 확대와 큰 베어링의 사용으로 베어링 수명을 연장하고 레이디얼 하중 및 축하중 용량 극대화.
- Output Shaft
  Shaft is One-Piece design, for ensure the planetary gears could accurate transmission. Enlarge the front bearing and larger span to rear bearing for largest radial and axial loading.

- 링기어
  고강도 합금강 재질, 헬리컬기어 디자인으로 정도가 뛰어나고 내마모성이 강하며 소음이 적음.
- Inner Gear Box
  High strength alloy steel. Gear is Helical gear design for high-precision, high abrasion and lower noise.

- 入力螺旋傘齒輪與輸入軸
  1. 搭配高精度軸襯,可適用於不同軸徑的伺服馬達
  2. 極佳的動平衡設計
  3. 優化的轉動慣量
  4. 模組化設計,能快速回應客戶不同速比的需求
- Input Helical Bevel Gear and Input Shaft
  1. With high precision bushing is easy to set up with any brand servomotor.
  2. Excellent dynamic balance
  3. Optimum mass moment of inertia.
  4. To modularize assembly design for rapid reaction customers all gear ratio requirement.